DECLARATION OF PERFORMANCE
DoP No. 2873-CPR-401-7 / 01.21-EN

1. Unique identification code of the product-type: **Toge concrete screw TSM high performance**
2. Type, batch or serial number or any other element allowing identification of the construction product as required pursuant to Article 11(4):

   Annex A 2
   Batch number: see packaging of the product.

3. Intended use or uses of the construction product, in accordance with the applicable harmonised technical specification, as foreseen by the manufacturer:

generic type	concrete screw
for use in	Cracked and non-cracked concrete C 20/25-C 50/60 (EN 206) covered sizes: 6, 8,10,12,14
option / category	Option 1 Seismic category C1 and C2
loading	static or quasi-static
material	zinc-plated steel, steel with zinc flake coating : dry internal conditions only stainless steel internal and external use without particular aggressive conditions high corrosion resistant steel internal and external use with particular aggressive conditions covered sizes: 6, 8,10,12,14

4. Name, registered trade name or registered trade mark and contact address of the manufacturer as required pursuant to Article 11(5):

   Toge Dübel GmbH & Co. KG, Illesheimer Strasse 10, 90431 Nuernberg

5. Where applicable, name and contact address of the authorised representative whose mandate covers the tasks specified in Article 12(2): --
6. System or systems of assessment and verification of constancy of performance of the construction product as set out in Annex V: **System 1**
7. In case of the declaration of performance concerning a construction product covered by a harmonised standard: --
8. In case of the declaration of performance concerning a construction product for which a European Technical Assessment has been issued:

   Deutsches Institut für Bautechnik, Berlin

   has issued the following:

   ETA-15/0514

   on the basis of

   EAD 330232-00-0601, Edition 4. Mai 2020

   The notified body **2873-CPR** performed
   i) determination of the product-type on the basis of type testing (including sampling), type calculation, tabulated values or descriptive documentation of the product ;
   ii) factory production control.
   iii) testing of samples taken at the factory in accordance with a prescribed test plan.

and has issued the following: certificate of conformity 2873-CPR-401-7.

9. Declared performance:

Essential Characteristics	**Design Method**	**Performance**	**Harmonized Technical Specification**
Characteristic resistance for tension load	EN 1992-4	Annex C1, C2	EOTA TR 045 EAD 330232-00-0601 EAD 330011-00-0601
Characteristic resistance for shear load	EN 1992-4	Annex C1, C2	
Minimum spacing and minimum edge distance	EN 1992-4	Annex B2	
Displacement for serviceability limit state	EN 1992-4	Annex C7	
Characteristic resistance for seismic	EN 1992-4	Annex C3, C4, C5	
Characteristic resistance under fire exposure	EN 1992-4	Annex C6	
Displacement under seismic actions	EN 1992-4	Annex C8	

Where pursuant to Article 37 or 38 in the Specific Technical Documentation has been used, the requirements with which the product complies: --

This declaration of performance is issued under the sole responsibility of the manufacturer identified in point 4.

Signed for and on behalf of the manufacturer by:

Waldemar Gunkel
Dipl.-Wirtsch.-Ing. (FH), B.Eng.
Head of Engineering

Nuernberg, 2021-03-12

Andreas Gerhard
CEO

Nuernberg, 2021-03-12

Configuration with metric connection threat and hexagon socket e.g. TSM 8x105 M10 SW5


Configuration with metric connection threat and hexagon drive e.g. TSM 8x105 M10 SW7

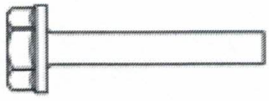


Configuration with washer and hexagon head e.g. TSM 8x80 SW13 VZ 40


Configuration with washer, hexagon head and TORX drive e.g. TSM 8x80 SW13


Configuration with washer and bund e.g. TSM BC ST 14x130 SW24 VZ 40


Configuration with hexagon head e.g. TSM 8x80 SW13 OS


Configuration with countersunk head and TORX drive e.g. TSM 8x80 C VZ 40


Configuration with pan head and TORX drive e.g. TSM 8x80 P VZ 40

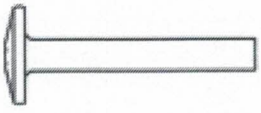


Configuration with large pan head and TORX drive e.g. TSM 8x80 LP VZ 40


Configuration with countersunk head and connection thread e.g. TSM 6x55 AG M8

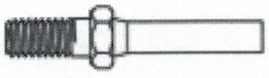


Configuration with hexagon drive and connection thread e.g. TSM 6x55 M8 SW10

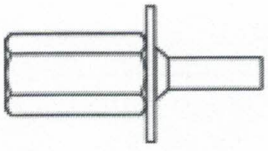
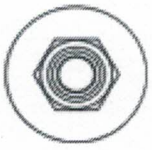

Configuration with internal thread and hexagon drive e.g. TSM 6x55 IM M8/10

TOGE concrete screw TSM high performance	**Annex A2**
Product description Screw types	

Table 4: Installation parameters

TSM concrete screw size			6		8			10		
Nominal embedment depth		h_{nom}	h_{nom1}	h_{nom2}	h_{nom1}	h_{nom2}	h_{nom3}	h_{nom1}	h_{nom2}	h_{nom3}
		[mm]	40	55	45	55	65	55	75	85
Nominal drill hole diameter	d_0	[mm]	6		8			10		
Cutting diameter of drill bit	$d_{cut} \leq$	[mm]	6,40		8,45			10,45		
Drill hole depth	$h_0 \geq$	[mm]	45	60	55	65	75	65	85	95
Clearance hole diameter	$d_f \leq$	[mm]	8		12			14		
Installation torque (version with connection thread)	T_{inst}	[Nm]	10		20			40		
Torque impact screw driver		[Nm]	Max. torque according to manufacturer's instructions							
			160		300			400		

TSM concrete screw size			12			14		
Nominal embedment depth		h_{nom}	h_{nom1}	h_{nom2}	h_{nom3}	h_{nom1}	h_{nom2}	h_{nom3}
		[mm]	65	85	100	75	100	115
Nominal drill hole diameter	d_0	[mm]	12			14		
Cutting diameter of drill bit	$d_{cut} \leq$	[mm]	12,50			14,50		
Drill hole depth	$h_0 \geq$	[mm]	75	95	110	85	110	125
Clearance hole diameter	$d_f \leq$	[mm]	16			18		
Installation torque (version with connection thread)	T_{inst}	[Nm]	60			80		
Torque impact screw driver		[Nm]	Max. torque according to manufacturer's instructions					
			650			650		

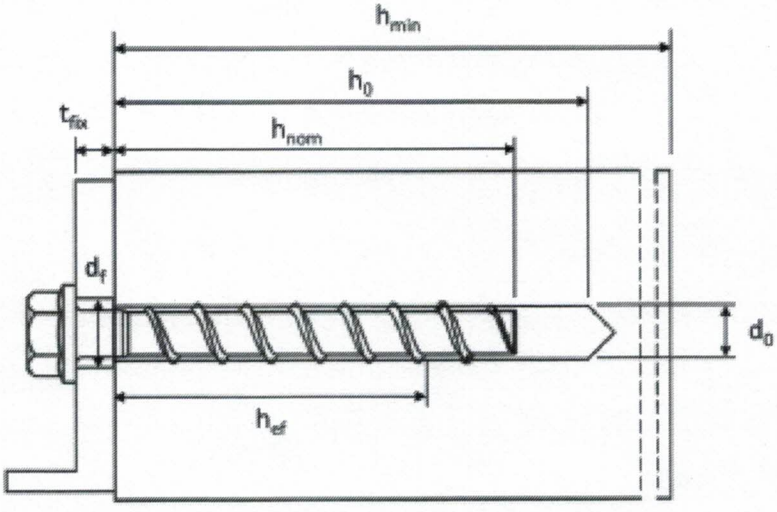

TOGE concrete screw TSM high Performance	**Annex B3**
Intended use Installation parameters	

Table 6: Characteristic values for static and quasi-static loading, sizes 6-10

TSM concrete screw size				6		8			10		
Nominal embedment depth		h_{nom}		h_{nom1}	h_{nom2}	h_{nom1}	h_{nom2}	h_{nom3}	h_{nom1}	h_{nom2}	h_{nom3}
			[mm]	40	55	45	55	65	55	75	85
Steel failure for tension and shear loading											
Characteristic tension load		$N_{Rk,s}$	[kN]	14,0		27,0			45,0		
Partial factor		$\gamma_{Ms,N}$	[-]	1,5							
Characteristic shear load		$V^0_{Rk,s}$	[kN]	7,0		13,5		17,0	22,5	34,0	
Partial factor		$\gamma_{Ms,V}$	[-]	1,25							
Ductility factor		k_7	[-]	0,8							
Characteristic bending load		$M^0_{Rk,s}$	[Nm]	10,9		26,0			56,0		
Pull-out failure											
Characteristic tension load C20/25	cracked	$N_{Rk,p}$	[kN]	2,0	4,0	5,0	9,0	12,0	9,0	$\geq N^0_{Rk,c}$ [1)]	
	uncracked	$N_{Rk,p}$	[kN]	4,0	9,0	7,5	12,0	16,0	12,0	20,0	26,0
Increasing factor for $N_{Rk,p}$	C25/30	Ψ_c	[-]	1,12							
	C30/37			1,22							
	C40/50			1,41							
	C50/60			1,58							
Concrete failure: Splitting failure, concrete cone failure and pry-out failure											
Effective embedment depth		h_{ef}	[mm]	31	44	35	43	52	43	60	68
k-factor	cracked	k_{cr}	[-]	7,7							
	uncracked	k_{ucr}	[-]	11,0							
Concrete cone failure	spacing	$s_{cr,N}$	[mm]	3 x h_{ef}							
	edge distance	$c_{cr,N}$	[mm]	1,5 x h_{ef}							
Splitting failure	resistance	$N^0_{Rk,sp}$	[kN]	2,0	4,0	5,0	9,0	12,0	9,0	16,0	19,0
	spacing	$s_{cr,Sp}$	[mm]	120	160	120	140	150	140	180	210
	edge distance	$c_{cr,Sp}$	[mm]	60	80	60	70	75	70	90	105
Factor for pry-out failure		k_8	[-]	1,0						2,0	
Installation factor		γ_{inst}	[-]	1,0							
Concrete edge failure											
Effective length in concrete		$l_f = h_{ef}$	[mm]	31	44	35	43	52	43	60	68
Nominal outer diameter of screw		d_{nom}	[mm]	6		8			10		

[1)] $N^0_{Rk,c}$ according to EN 1992-4:2018

TOGE concrete screw TSM high Performance

Performances
Characteristic values for static and quasi-static loading, sizes 6-10

Annex C1

Table 7: Characteristic values for static and quasi-static loading, sizes 12-14

TSM concrete screw size				12			14		
Nominal embedment depth			h_{nom}	h_{nom1}	h_{nom2}	h_{nom3}	h_{nom1}	h_{nom2}	h_{nom3}
			[mm]	65	85	100	75	100	115
Steel failure for tension and shear loading									
Characteristic tension load		$N_{Rk,s}$	[kN]	67,0			94,0		
Partial factor		$\gamma_{Ms,N}$	[-]	1,5					
Characteristic shear load		$V^0_{Rk,s}$	[kN]	33,5	42,0		56,0		
Partial factor		$\gamma_{Ms,V}$	[-]	1,25					
Ductility factor		k_7	[-]	0,8					
Characteristic bending load		$M^0_{Rk,s}$	[Nm]	113,0			185,0		
Pull-out failure									
Characteristic tension load C20/25	cracked	$N_{Rk,p}$	[kN]	12,0	$\geq N^0_{Rk,c}$ [1]				
	uncracked	$N_{Rk,p}$	[kN]	16,0					
Increasing factor for $N_{Rk,p}$	C25/30	Ψ_c	[-]	1,12					
	C30/37			1,22					
	C40/50			1,41					
	C50/60			1,58					
Concrete failure: Splitting failure, concrete cone failure and pry-out failure									
Effective embedment depth		h_{ef}	[mm]	50	67	80	58	79	92
k-factor	cracked	$k_1 = k_{cr}$	[-]	7,7					
	uncracked	$k_1 = k_{ucr}$	[-]	11,0					
Concrete cone failure	spacing	$s_{cr,N}$	[mm]	3 x h_{ef}					
	edge distance	$c_{cr,N}$	[mm]	1,5 x h_{ef}					
Splitting failure	resistance	$N^0_{Rk,sp}$	[kN]	12,0	18,5	24,5	15,0	24,0	30,0
	spacing	$s_{cr,Sp}$	[mm]	150	210	240	180	240	280
	edge distance	$c_{cr,Sp}$	[mm]	75	105	120	90	120	140
Factor for pry-out failure		k_8	[-]	1,0	2,0		1,0	2,0	
Installation factor		γ_{inst}	[-]	1,0					
Concrete edge failure									
Effective length in concrete		$l_f = h_{ef}$	[mm]	50	67	80	58	79	92
Nominal outer diameter of screw		d_{nom}	[mm]	12			14		

[1] $N^0_{Rk,c}$ according to EN 1992-4:2018

Table 8: Seismic category C1 – Characteristic load values

TSM concrete screw size			6		8	10		12	14
Nominal embedment depth	h_{nom}		h_{nom1}	h_{nom2}	h_{nom3}	h_{nom1}	h_{nom3}	h_{nom3}	h_{nom3}
		[mm]	40	55	65	55	85	100	115
Steel failure for tension and shear load									
Characteristic load	$N_{Rk,s,eq}$	[kN]	14,0		27,0	45,0		67,0	94,0
Partial factor	$\gamma_{Ms,eq}$	[-]	1,5						
Characteristic load	$V_{Rk,s,eq}$	[kN]	4,7	5,5	8,5	13,5	15,3	21,0	22,4
Partial factor	$\gamma_{Ms,eq}$	[-]	1,25						
With filling of the annular gap [1]	α_{gap}	[-]	1,0						
Without filling of the annular gap	α_{gap}	[-]	0,5						
Pull-out failure									
Characteristic tension load in cracked concrete C20/25	$N_{Rk,p,eq}$	[kN]	2,0	4,0	12,0	9,0	$\geq N^0_{Rk,c}$ [2]		
Concrete cone failure									
Effective embedment depth	h_{ef}	[mm]	31	44	52	43	68	80	92
Edge distance	$c_{cr,N}$	[mm]	$1{,}5 \times h_{ef}$						
Spacing	$s_{cr,N}$	[mm]	$3 \times h_{ef}$						
Installation safety factor	γ_{inst}	[-]	1,0						
Concrete pry-out failure									
Factor for pry-out failure	k_8	[-]	1,0				2,0		
Concrete edge failure									
Effective length in concrete	$l_f = h_{ef}$	[mm]	31	44	52	43	68	80	92
Nominal outer diameter of screw	d_{nom}	[mm]	6	6	8	10	10	12	14

[1] Filling of the annular gap according to annex B7, figure 5

[2] $N^0_{Rk,c}$ according to EN 1992-4:2018

Table 9: Seismic category C2 [1] – Characteristic load values **with filled annular gap according to annex B7, figure 5**

TSM concrete screw size			8	10	12	14
Nominal embedment depth	h_{nom}		h_{nom3}			
		[mm]	65	85	100	115
Steel failure for tension						
Characteristic load	$N_{Rk,s,eq}$	[kN]	27,0	45,0	67,0	94,0
Partial factor	$\gamma_{Ms,eq}$	[-]	1,5			
With filling of the annular gap	α_{gap}	[-]	1,0			
Pull-out failure						
Characteristic load in cracked concrete	$N_{Rk,p,eq}$	[kN]	2,4	5,4	7,1	10,5
Steel failure for shear load						
Characteristic load	$V_{Rk,s,eq}$	[kN]	9,9	18,5	31,6	40,7
Partial factor	$\gamma_{Ms,eq}$	[-]	1,25			
With filling of the annular gap	α_{gap}	[-]	1,0			
Concrete cone failure						
Effective embedment depth	h_{ef}	[mm]	52	68	80	92
Edge distance	$c_{cr,N}$	[mm]	1,5 x h_{ef}			
Spacing	$s_{cr,N}$	[mm]	3 x h_{ef}			
Installation safety factor	γ_{inst}	[-]	1,0			
Concrete pry-out failure						
Factor for pry-out failure	k_8	[-]	1,0	2,0		
Concrete edge failure						
Effective length in concrete	$l_f = h_{ef}$	[mm]	52	68	80	92
Nominal outer diameter of screw	d_{nom}	[mm]	8	10	12	14

1) A4 and HCR not suitable

Table 10: Seismic category C2 [1] – Characteristic load values **without filled annular gap according to annex B7, figure 3**

TSM concrete screw size			8	10	12	14
Nominal embedment depth	h_{nom}		h_{nom3}			
		[mm]	65	85	100	115
Steel failure for tension (hexagon head type)						
Characteristic load	$N_{Rk,s,eq}$	[kN]	27,0	45,0	67,0	94,0
Partial factor	$\gamma_{Ms,eq}$	[-]	1,5			
Pull-out failure (hexagon head type)						
Characteristic load in cracked concrete	$N_{Rk,p,eq}$	[kN]	2,4	5,4	7,1	10,5
Steel failure for shear load (hexagon head type)						
Characteristic load	$V_{Rk,s,eq}$	[kN]	10,3	21,9	24,4	23,3
Partial factor	$\gamma_{Ms,eq}$	[-]	1,25			
Without filling of the annular gap	α_{gap}	[-]	0,5			
Steel failure for tension (countersunk head type)						
Characteristic load	$N_{Rk,s,eq}$	[kN]	27,0	45,0	no performance assessed	
Partial factor	$\gamma_{Ms,eq}$	[-]	1,5			
Pull-out failure (countersunk head type)						
Characteristic load in cracked concrete	$N_{Rk,p,eq}$	[kN]	2,4	5,4	no performance assessed	
Steel failure for shear load (countersunk head type)						
Characteristic load	$V_{Rk,s,eq}$	[kN]	3,6	13,7	no performance assessed	
Partial factor	$\gamma_{Ms,eq}$	[-]	1,25			
Without filling of the annular gap	α_{gap}	[-]	0,5			
Concrete cone failure						
Effective embedment depth	h_{ef}	[mm]	52	68	80	92
Edge distance	$c_{cr,N}$	[mm]	1,5 x h_{ef}			
Spacing	$s_{cr,N}$	[mm]	3 x h_{ef}			
Installation safety factor	γ_{inst}	[-]	1,0			
Concrete pry-out failure						
Factor for pry-out failure	k_8	[-]	1,0	2,0		
Concrete edge failure						
Effective length in concrete	$l_f = h_{ef}$	[mm]	52	68	80	92
Nominal outer diameter of screw	d_{nom}	[mm]	8	10	12	14

[1] A4 and HCR not suitable

Table 11: Fire exposure – characteristic values of resistance

TSM concrete screw size				6		8			10			12			14		
Nominal embedment depth			h_{nom}	1	2	1	2	3	1	2	3	1	2	3	1	2	3
			[mm]	40	55	45	55	65	55	75	85	65	85	100	75	100	115
Steel failure for tension and shear load																	
characteristic Resistance	R30	$N_{Rk,s,fi30}$	[kN]	0,9		2,4			4,4			7,3			10,3		
	R60	$N_{Rk,s,fi60}$	[kN]	0,8		1,7			3,3			5,8			8,2		
	R90	$N_{Rk,s,fi90}$	[kN]	0,6		1,1			2,3			4,2			5,9		
	R120	$N_{Rk,s,fi120}$	[kN]	0,4		0,7			1,7			3,4			4,8		
	R30	$V_{Rk,s,fi30}$	[kN]	0,9		2,4			4,4			7,3			10,3		
	R60	$V_{Rk,s,fi60}$	[kN]	0,8		1,7			3,3			5,8			8,2		
	R90	$V_{Rk,s,fi90}$	[kN]	0,6		1,1			2,3			4,2			5,9		
	R120	$V_{Rk,s,fi120}$	[kN]	0,4		0,7			1,7			3,4			4,8		
	R30	$M^0_{Rk,s,fi30}$	[Nm]	0,7		2,4			5,9			12,3			20,4		
	R60	$M^0_{Rk,s,fi60}$	[Nm]	0,6		1,8			4,5			9,7			15,9		
	R90	$M^0_{Rk,s,fi90}$	[Nm]	0,5		1,2			3,0			7,0			11,6		
	R120	$M^0_{Rk,s,fi120}$	[Nm]	0,3		0,9			2,3			5,7			9,4		
Pull-out failure																	
Characteristic Resistance	R30-R90	$N_{Rk,p,fi}$	[kN]	0,5	1,0	1,3	2,3	3,0	2,3	4,0	4,8	3,0	4,7	6,2	3,8	6,0	7,6
	R120	$N_{Rk,p,fi}$	[kN]	0,4	0,8	1,0	1,8	2,4	1,8	3,2	3,9	2,4	3,8	4,9	3,0	4,8	6,1
Concrete cone failure																	
Characteristic Resistance	R30-R90	$N^0_{Rk,c,fi}$	[kN]	0,9	2,2	1,2	2,1	3,4	2,1	4,8	6,6	3,0	6,3	9,9	4,4	9,6	14,0
	R120	$N^0_{Rk,c,fi}$	[kN]	0,7	1,8	1,0	1,7	2,7	1,7	3,8	5,3	2,4	5,1	7,9	3,5	7,6	11,2
Edge distance																	
R30 bis R120		$c_{cr,fi}$	[mm]	2 x h_{ef}													
In case of fire attack from more than one side, the minimum edge distance shall be ≥300mm.																	
Spacing																	
R30 bis R120		$s_{cr,fi}$	[mm]	4 x h_{ef}													
Pry-out failure																	
R30 bis R120		k_8	[-]	1,0						2,0		1,0	2,0		1,0	2,0	
The anchorage depth has to be increased for wet concrete by at least 30 mm compared to the given value.																	

Table 12: Displacements under static and quasi-static tension load

TSM concrete screw size				6		8			10		
Nominal embedment depth			h_{nom}	h_{nom1}	h_{nom2}	h_{nom1}	h_{nom2}	h_{nom3}	h_{nom1}	h_{nom2}	h_{nom3}
			[mm]	40	55	45	55	65	55	75	85
Cracked concrete	tension load	N	[kN]	0,95	1,9	2,4	4,3	5,7	4,3	7,9	9,6
	displacement	δ_{N0}	[mm]	0,3	0,6	0,6	0,7	0,8	0,6	0,5	0,9
		$\delta_{N\infty}$	[mm]	0,4	0,4	0,6	1,0	0,9	0,4	1,2	1,2
Uncracked concrete	tension load	N	[kN]	1,9	4,3	3,6	5,7	7,6	5,7	9,5	11,9
	displacement	δ_{N0}	[mm]	0,4	0,6	0,7	0,9	0,5	0,7	1,1	1,0
		$\delta_{N\infty}$	[mm]	0,4	0,4	0,6	1,0	0,9	0,4	1,2	1,2

TSM concrete screw size				12			14		
Nominal embedment depth			h_{nom}	h_{nom1}	h_{nom2}	h_{nom3}	h_{nom1}	h_{nom2}	h_{nom3}
			[mm]	65	85	100	75	100	115
Cracked concrete	tension load	N	[kN]	5,7	9,4	12,3	7,6	12,0	15,1
	displacement	δ_{N0}	[mm]	0,9	0,5	1,0	0,5	0,8	0,7
		$\delta_{N\infty}$	[mm]	1,0	1,2	1,2	0,9	1,2	1,0
Uncracked concrete	tension load	N	[kN]	7,6	13,2	17,2	10,6	16,9	21,2
	displacement	δ_{N0}	[mm]	1,0	1,1	1,2	0,9	1,2	0,8
		$\delta_{N\infty}$	[mm]	1,0	1,2	1,2	0,9	1,2	1,0

Table 13: Displacements under static and quasi-static shear load

TSM concrete screw size				6		8			10		
Nominal embedment depth			h_{nom}	h_{nom1}	h_{nom2}	h_{nom1}	h_{nom2}	h_{nom3}	h_{nom1}	h_{nom2}	h_{nom3}
			[mm]	40	55	45	55	65	55	75	85
Cracked and uncracked concrete	shear load	V	[kN]	3,3		8,6			16,2		
	displacement	δ_{V0}	[mm]	1,55		2,7			2,7		
		$\delta_{V\infty}$	[mm]	3,1		4,1			4,3		

TSM concrete screw size				12			14		
Nominal embedment depth			h_{nom}	h_{nom1}	h_{nom2}	h_{nom3}	h_{nom1}	h_{nom2}	h_{nom3}
			[mm]	65	85	100	75	100	115
Cracked and uncracked concrete	shear load	V	[kN]	20,0			30,5		
	displacement	δ_{V0}	[mm]	4,0			3,1		
		$\delta_{V\infty}$	[mm]	6,0			4,7		

Table 14: Seismic category C2 [1] – Displacements **with filled annular gap according to annex B7, figure 5**

TSM concrete screw size			8	10	12	14
Nominal embedment depth		h_{nom}	h_{nom3}			
		[mm]	65	85	100	115
Displacements under tension loads (**hexagon** head type)						
Displacement DLS	$\delta_{N,eq(DLS)}$	[mm]	0,66	0,32	0,57	1,16
Displacement ULS	$\delta_{N,eq(ULS)}$	[mm]	1,74	1,36	2,36	4,39
Displacements under shear loads (**hexagon** head type with hole clearance)						
Displacement DLS	$\delta_{V,eq(DLS)}$	[mm]	1,68	2,91	1,88	2,42
Displacement ULS	$\delta_{V,eq(ULS)}$	[mm]	5,19	6,72	5,37	9,27

Table 15: Seismic category C2 [1] – Displacements **without filled annular gap according to annex B7, figure 3**

TSM concrete screw size			8	10	12	14
Nominal embedment depth		h_{nom}	h_{nom3}			
		[mm]	65	85	100	115
Displacements under tension loads (**hexagon** head type)						
Displacement DLS	$\delta_{N,eq(DLS)}$	[mm]	0,66	0,32	0,57	1,16
Displacement ULS	$\delta_{N,eq(ULS)}$	[mm]	1,74	1,36	2,36	4,39
Displacements under tension loads (**countersunk** head type)						
Displacement DLS	$\delta_{N,eq(DLS)}$	[mm]	0,66	0,32	no performance assessed	
Displacement ULS	$\delta_{N,eq(ULS)}$	[mm]	1,74	1,36		
Displacements under shear loads (**hexagon** head type with hole clearance)						
Displacement DLS	$\delta_{V,eq(DLS)}$	[mm]	4,21	4,71	4,42	5,60
Displacement ULS	$\delta_{V,eq(ULS)}$	[mm]	7,13	8,83	6,95	12,63
Displacements under shear loads (**countersunk** head type with hole clearance)						
Displacement DLS	$\delta_{V,eq(DLS)}$	[mm]	2,51	2,98	no performance assessed	
Displacement ULS	$\delta_{V,eq(ULS)}$	[mm]	7,76	6,25		

[1] A4 and HCR not suitable